FRONT VIEW

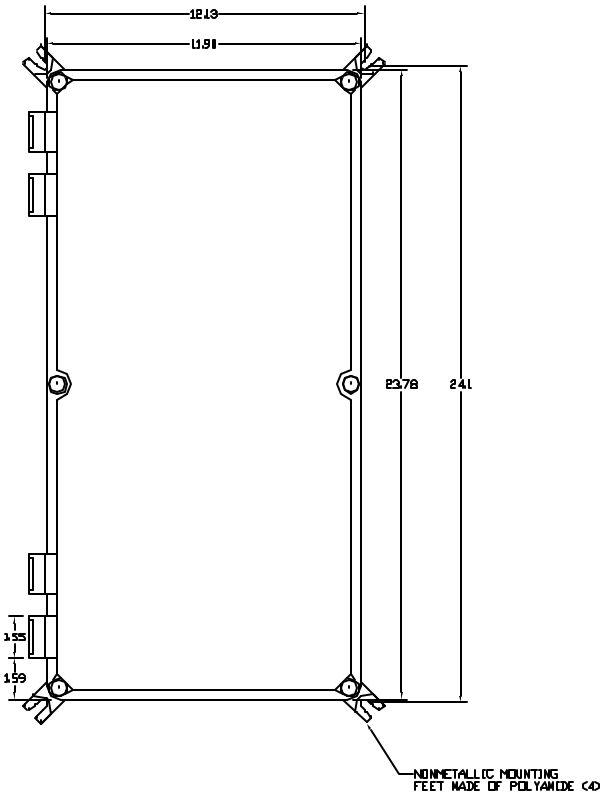

RIGHT SIDE VIEW
LATCHES SHOWN THIS VIEW ONLY

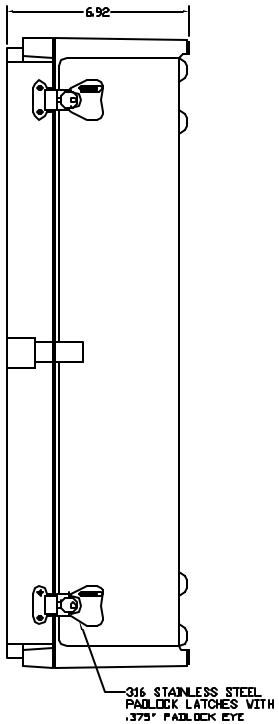

FRONT VIEW COVER REMOVED

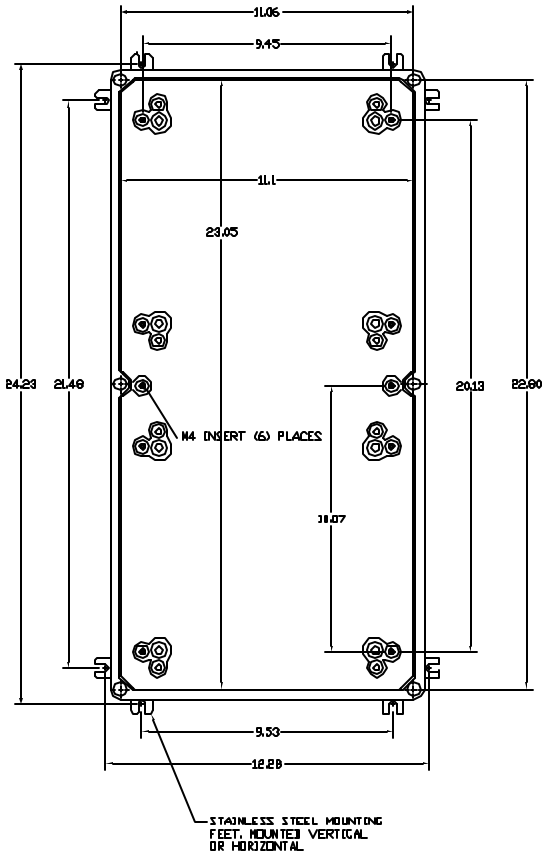

END VIEW

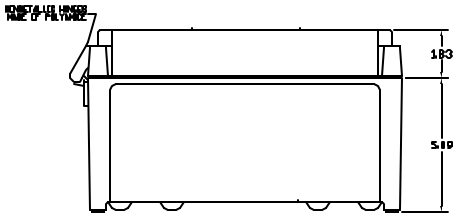

SECTION A-A

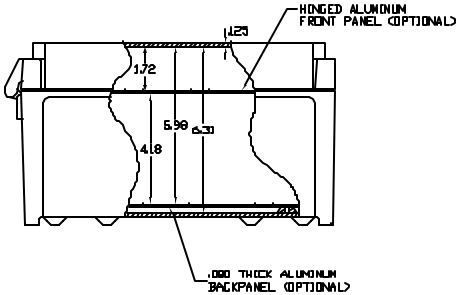

NOTES

1. ENCLOSURE MATERIAL MADE OF GRAY (RAL 7035) HOT MOLDED FIBERGLASS REINFORCED POLYESTER.
2. U.L. LISTED PER STD. 508. (FILE# E34519)
3. CSA CERTIFIED PER STD. C22.2 NO. 94. (FILE# LR39600)
4. NEMA RATED TYPE 3, 3R, 3S, 4, 4X, 6, 12, AND 13.
5. IEC 529 RATED IP 66.
6. RESISTANT TO TEMPERATURES FROM -50 TO 150 DEG C.
7. SELF EXTINGUISHING AND HALOGEN FREE.
8. CABINETS ARE MAINTENANCE FREE AND CORROSION RESISTANT.

VYNCKIER
ENCLOSURE SYSTEMS, INC.

VINCKIER PART # A61-2412HPL2
APO SERIES ENCLOSURE

DRAWN BY: NICOLE SMITH	DATE 03/14/01	CHECKED BY:	DATE:
SCALE: FULL	REV: 0	DRAWING NO. A61-2412HPL2	