FRONT VIEW DOOR REMOVED

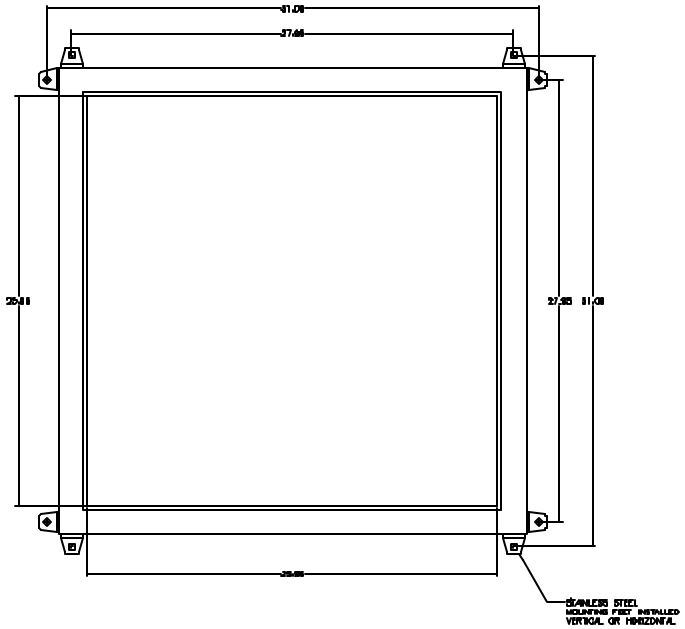

FRONT VIEW

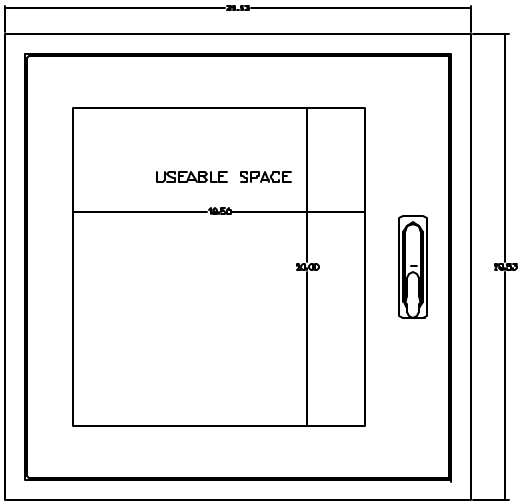

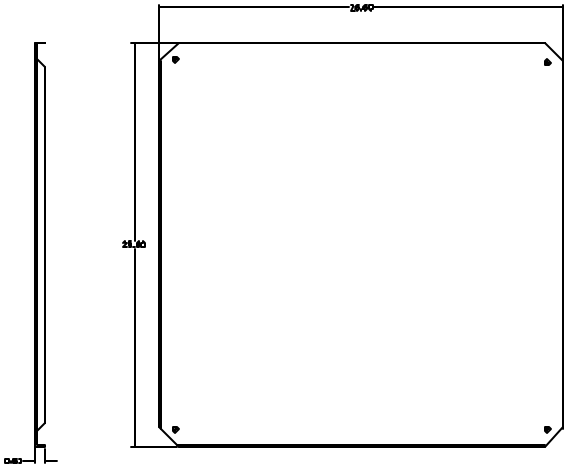

BACK PLATE

END VIEW

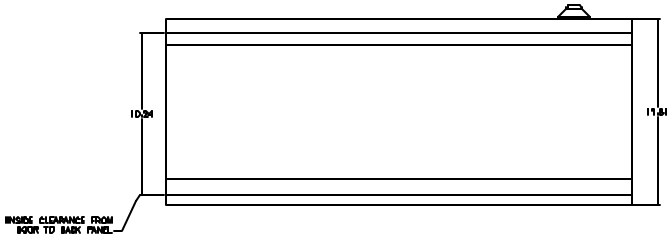

VYNCKIER
ENCLOSURE SYSTEMS, INC.

SP3030A
SUPERPOLYREL SERIES ENCLOSURE