REVISIONS				
ZONE	REV	DESCRIPTION	DATE	APPROVED

FRONT VIEW

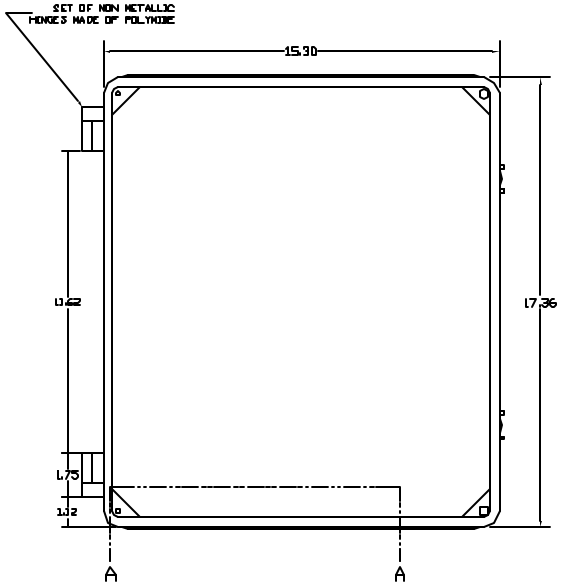

RIGHT SIDE VIEW

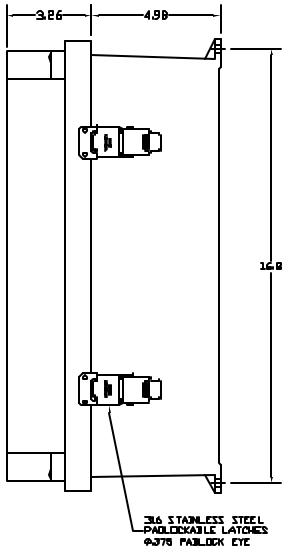

FRONT VIEW COVER REMOVED

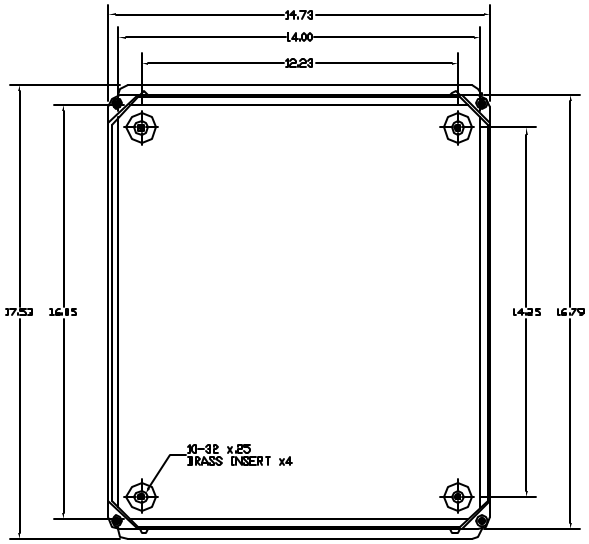

END VIEW

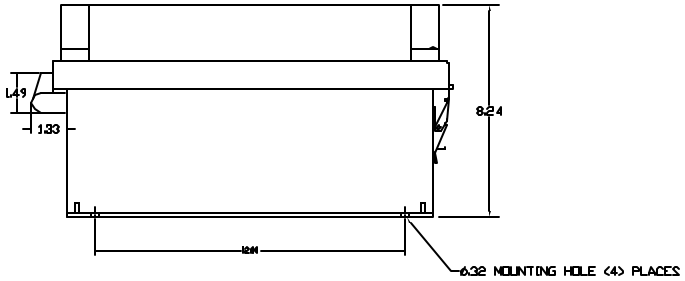

SECTION A-A

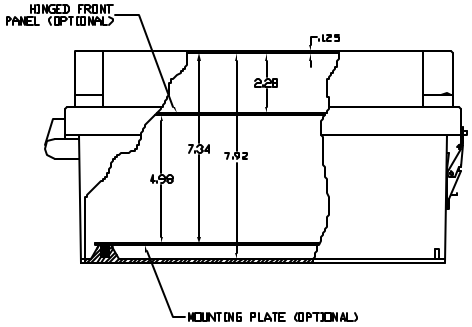

NOTES:
1. ENCLOSURE MATERIAL MADE OF GRAY (RAL 7036) HOT MOLDED FIBERGLASS REINFORCED POLYESTER.
2. UL. LISTED PER STD. 508. (FILE# E54016)
3. CSA CERTIFIED PER STD. C22.2 NO. 94. (FILE# LR36508)
4. NEMA RATED TYPE 3, 3R, 3S, 4, 4X,12 AND 13.
5. IEC 529 RATED IP 68.
6. TEMPERATURE RANGES FROM -50 DEG C TO 150 DEG C.
7. SELF EXTINGUISHING AND HALOGEN FREE.
8. ACCESSORIES INCLUDE: BACK PANELS, DEAD FRONT PANELS, HINGED FRONT PLATES, HINGED COVERS, PRINT POCKETS, LATCHES, WINDOWS, AND VENTILATORS.
9. CABINETS ARE MAINTENANCE FREE AND CORROSION RESISTANT.

VYNCKIER
ENCLOSURE SYSTEMS LTD.

VJ SERIES ENCLOSURE
VYNCKIER PART# RVJ1614NHWPL2

SIZE D	FSCM NO.	DWG No. RVJ1614NHWPL2	REV 1
SCALE: FULL		SHEET	